DOOSAN

Optimal Solutions for the Future

HC Ⅱ series

Compact Horizontal Machining Center

HC Ⅱ series

HC 400 Ⅱ
HC 500 Ⅱ

ver. EN 160502 SU

HC Ⅱ series

Compact horizontal machining center HC Ⅱ series is designed to provide maximum productivity, accuracy, and number of convenient features. The compact design offers flexibility to utilize limited factory space efficiently.

Contents

Enhanced Design

New aesthetics and simplified design eases machine operation.

Increased Productivity

New high speed 12,000rpm spindle, wider selection of tool magazine and automation options further enhances versatility and productivity.

Improved Ergonomics

Newly designed operation panel and built-in pallet setup switch further improves ergonomics of the machine.

Basic Structure

Highly rigid machine structure and compact design to meet all users' needs.

Robust Machine Structure

Doosan engineers have performed FEM analysis to design the most durable and stable structure. As a result, the machine is capable of extensive heavy cutting process.

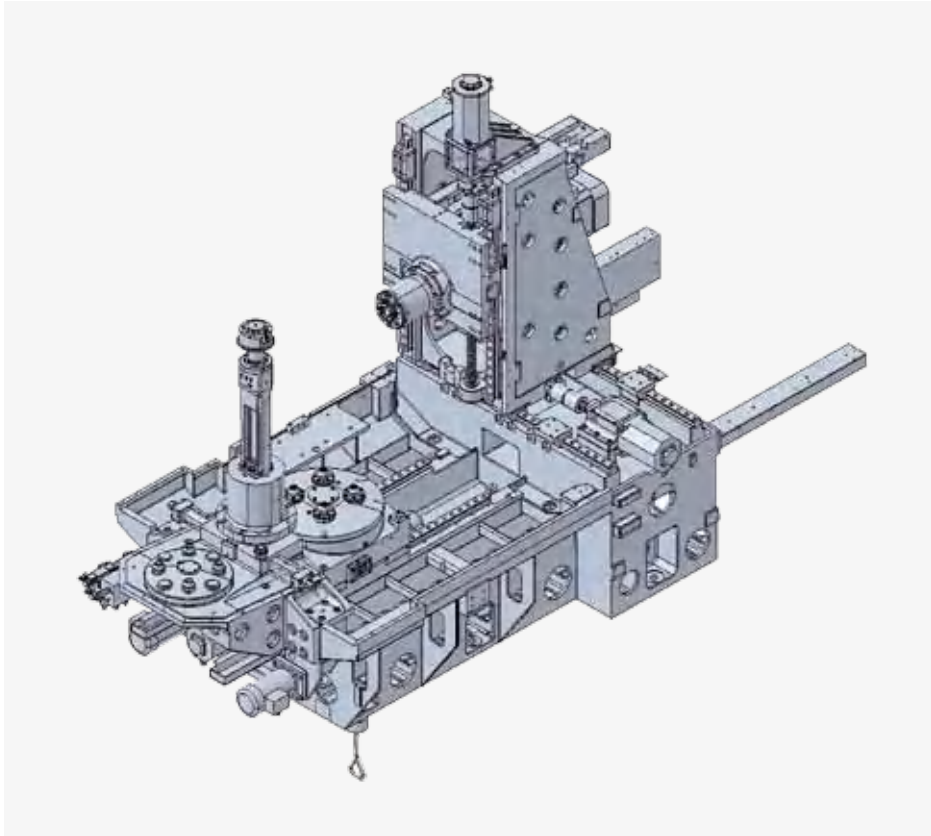

Compact Design

The compact design allows users to utilize limited factory space efficiently.

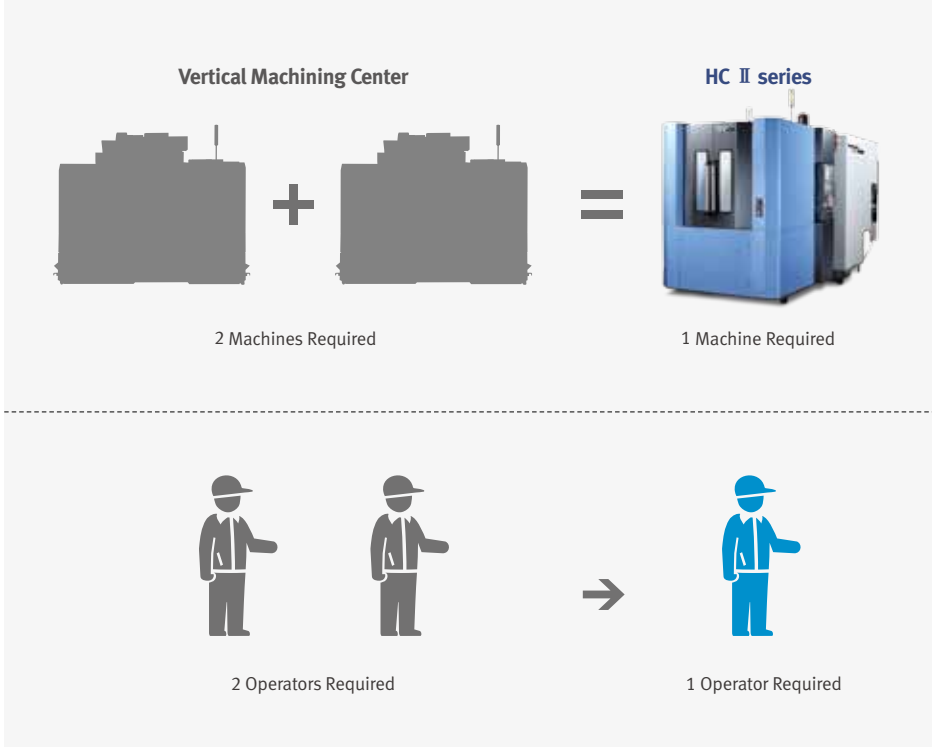

Travel Axes

All axes utilize highly reliable and durable LM roller guides.

High Speed Roller Guides

LM roller guides on all axes increases machine reliability and productivity.

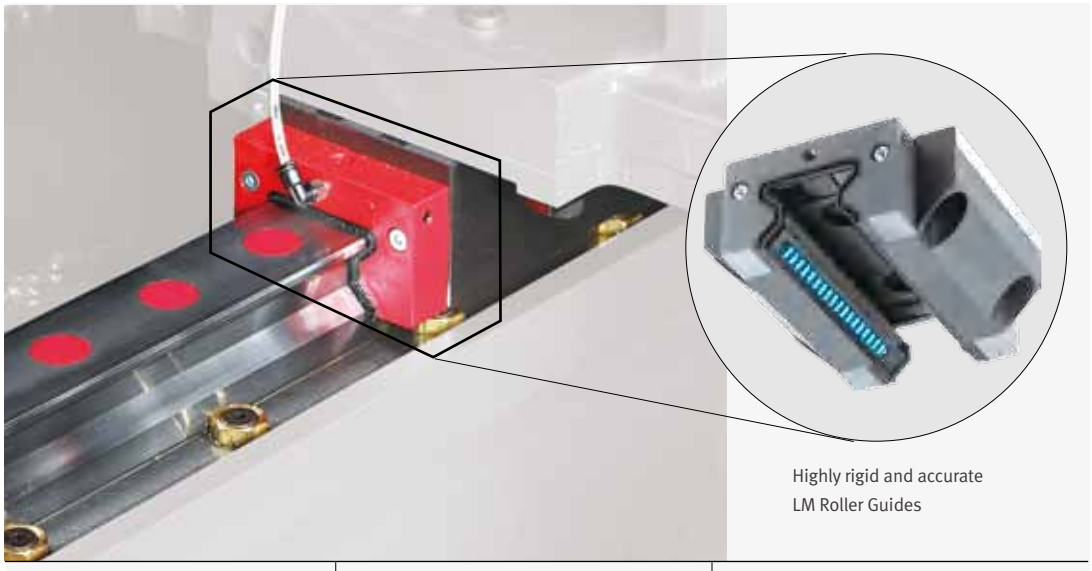

Highly rigid and accurate LM Roller Guides

	HC 400 II	HC 500 II
Axes Travel (X / Y / Z)	600 / 560 / 565 mm (23.6 / 22 / 22.2 inch)	850 / 700 / 750 mm (33.4 / 27.5 / 29.5 inch)
Rapid Traverse	40 m/min (1574.8 ipm)	

Spindle

12,000rpm spindle option has been added for optimum productivity in high speed machining application.

High Speed Spindle

Users can select different types of high performance spindle to meet their machining needs. Standard 8,000rpm spindle can deliver up to 353.4N·m of torque to perform extreme heavy cutting process, while 12,000rpm spindle option can provide maximum productivity in high speed cutting process.

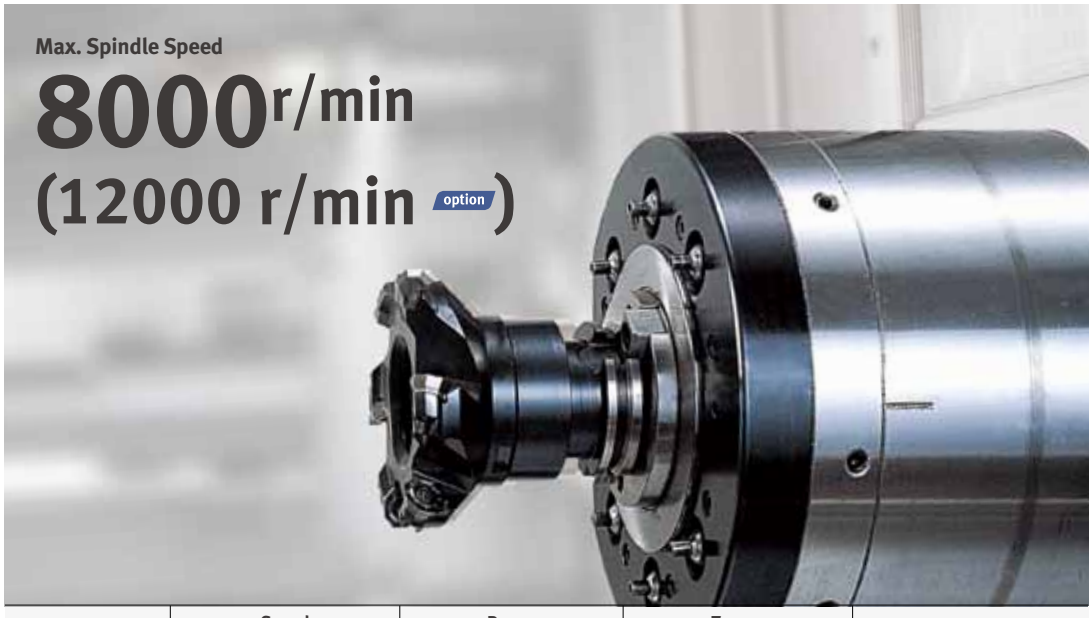

Model	Speed r/min	Power kW (Hp)	Torque N·m (ft-lbs)	Type
Standard	8000	18.5 / 11 (24.8 / 14.7)	353.4 (260.6)	ISO #40
Option	12000	18.5 / 11 (24.8 / 14.7)	117 (86.3)	

Tool Magazine

80 tool magazine has been added to offer wider range of ATC magazine options.

Wide range of options to meet more users' needs

Wide selections of tool magazines are available per user's preference. These automatic tool magazines are operated by our newest servo motor to minimize tool change time, and the fixed address tool storage system makes it easy for users to select desired tool without confusion.

Tool Storage Capacity

40 tools

{60 / 80 / 120 / 170 / 262}

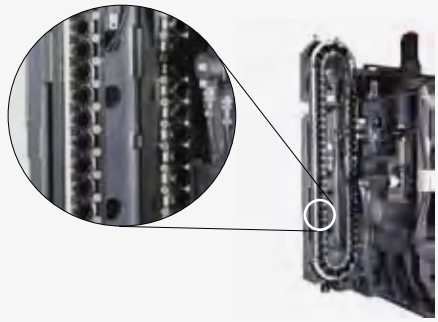

Automatic Tool Changer (ATC)

Cam-type ATC provides high reliability and durability, and minimizes non-cutting time.

Tool change time

1.5s

Automatic Pallet Changer (APC)

More reliable and conveniently designed high speed automatic pallet changer.

High Speed Automatic Pallet Changer

Standard high speed rotary type APC provide extreme reliability and a large work space allows users to easily setup the pallet.

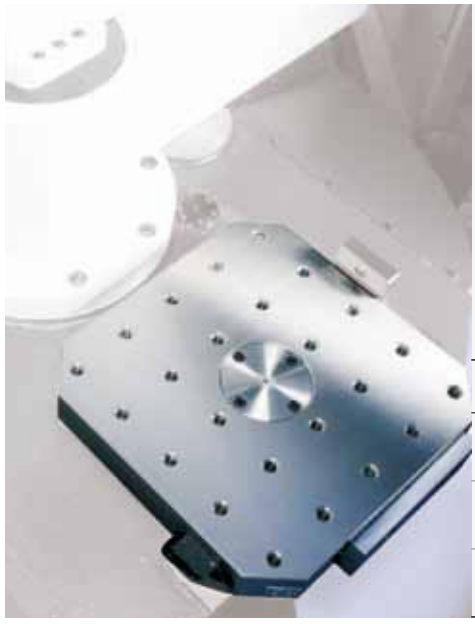

Max. Workpiece Size

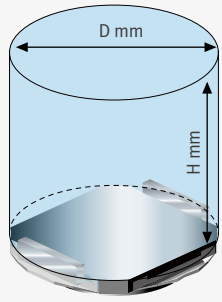

	HC 400 II	HC 500 II
Pallet Size	400 x 400 mm (15.7 x 15.7 inch)	500 x 500 mm (19.7 x 19.7 inch)
Max. Workpiece Size	Ø600 x H800 mm (23.6 x 31.5 inch)	Ø800 x H900 mm (31.5 x 35.4 inch)
Max. Load	400 kg (881 lb)	500 kg (1102.3 lb)

Standard / Optional Specifications

Diverse optional features are available to meet specific customer requirements.

● Standard ○ Optional X N/A

NO.	Division	Option		HC 400 Ⅱ	HC 500 Ⅱ
1	Tool Magazine	40 tools		●	●
2		60 tools		○	○
3		80 tools		○	○
4		120 tools		○	○
5		170 tools		○	○
6		262 tools		○	○
7	Tool Specifications	BT40		●	●
8		CAT40		○	○
9		DIN40		○	○
10		HSK A-63		○	○
11	Mist Collector	Mist Collector		○	○
12	Spindle	8000 r/min	18.5 / 11 kW (24.8 / 14.7 Hp)	●	●
13		12000 r/min	18.5 / 11 kW (24.8 / 14.7 Hp)	○	○
14		Spindle air curtain		●	●
15	Hydraulic fixtures	Hydraulic fixture line	2 X 2	○	○
16			4 X 4	○	○
17			6 X 6	○	○
18			8 X 8	○	○
19		Hydraulic fixture unit		○	○
20	Automatic Workpiece Measurement Device	OMP60_RENISHAW		○	○
21		RMP60_RENISHAW		○	○
22	Automatic Tool Measurement Device	BK 9		○	○
24		Limit Switch (OMRON)		○	○
25		TS27R		○	○
27	Chip Handling System	Chip conveyor	Hinged type	○	○
28			Scraper type	○	○
29			Drum type	○	○
30		Chip bucket		○	○
31	Coolant	FLOOD		●	●
32		FLUSHING		●	●
33		SHOWER		○	○
35		TSC	1.5 kW 2.0 MPA (2 Hp 290 psi)	○	○
36			3.0 kW 2.0 MPA (4 Hp 435.1 psi)	○	○
37			7.5 kW 2.0 MPA (10 Hp 1015.3 psi)	○	○
38		Coolant gun		○	○
39		Oil skimmer		○	○
40		MQL system		○	○
41	Table	Index table		●	●
42		Rotary Table		○	○
43	Pallet	Tapped pallet		●	●
44		T-Slot pallet		○	○
45	AIR	Pallet air seat		○	○
46		AIR GUN		○	○
47	MPG	Portable MPG		●	●

Diverse Options

Proper chip disposal is very important for improving productivity and environment. Therefore, we recommend better chip management for users to work in a safer working environment.

Chip Conveyor option

Scraper type

Hinge type

Drum filter type

Chip Conveyor

Measurement Systems

Auto tool damage detection device Ⅰ option
(BK 9)

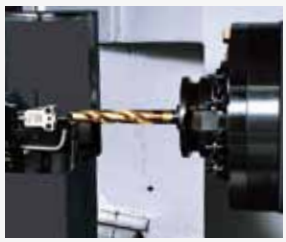

Auto tool damage detection device Ⅱ option
(OMRON)

Automatic tool measuring device (TS 27R) option

Environment-friendly Devices

Oil skimmer option

Mist Collector option

Chip Disposal System

Flushing coolant

Flood coolant

Shower coolant option

Coolant gun option

Coolant spray gun on the spindle head

Screw conveyor

Spindle-through coolant spray device (TSC) option

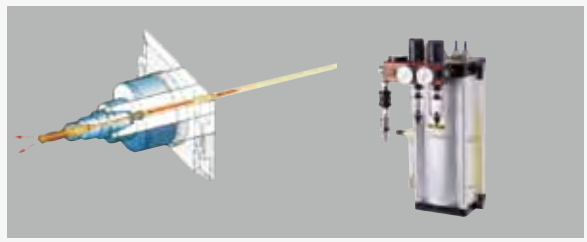

MQL system option
Misting device

Pallet Extension System

Doosan Pallet Extension System provides automated solution to maximize productivity. Simple installation and ease of maintenance makes it convenient for users to operate and maintain.

Doosan Linear Pallet System [LPS Ⅱ Compact] option

The LPS II Compact, a compact & economic pallet extension system, is the most affordable solution that is delivered in full assembly.

LPS Ⅱ compact

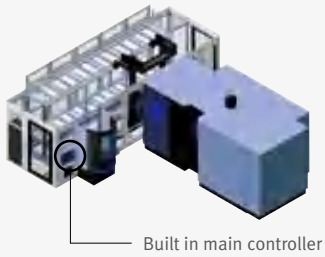

Major Features

- Compact size
- Cost effective installation
- Fully assembled delivery
- Convenient operating system (DPMS II)

	LPS 400 II compact	LPS 500 II compact
Compatible model	HC 400 II	HC 500 II
Fork type	Single Fork type	
No. of machines	1	
No. of setup stations	1	
No. of pallets	12	
Dimensions (L x W)	7190 mm x 2225 mm (283.1 inch x 87.6 inch)	

Doosan Linear Pallet System [LPS Ⅱ] option

Doosan's representative LPS system, designed to provide the optimum automated pallet solution. LPS Ⅱ is capable of multiple extension and layout change to provide flexible manufacturing solution.

LPS Ⅱ (Linear Pallet System)

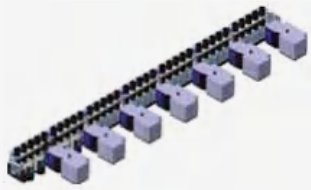

Major Features

- Expandable System
- Ideal for Managing High Efficiency Manufacturing Parts
- Stable and efficient operation system
- Faster installation and commissioning
- Compatible with all Doosan Horizontal Machining Centers
- Easy maintenance

LPS II Model	LPS 400 II	LPS 500 II
Compatible model	HC 400 II	HC 500 II
Fork type	Twin Fork type	
No. of machines	1 – 7	
No. of setup stations	1 – 4	
No. of pallets	12 ~ 70	
Dimensions (L x W)	7824 mm x 2400 mm (308 inch x 94.5 inch)	

LPS Standard Control Software

- Stores basic data which can be easily put in to provide flexible production
- Management software for rapid production and changing production quantity
- LPS management solution for fast and flexible production

Doosan Production Management System [DPMS]

The DPMS is a system designed to ensure effective control and management of the LPS. The main window allows operators to quickly & flexibly manage the system in case of sudden change in output.

System Outline

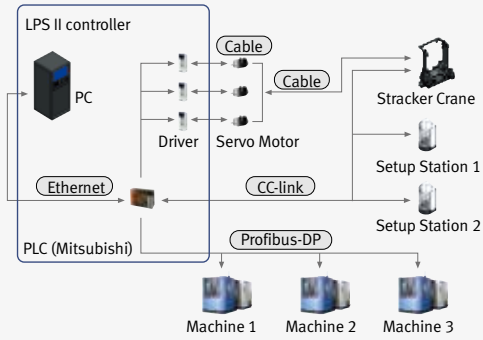

DOOSAN 5 APC

Compact and simple multiple pallet system that allows users to maximize productivity and efficiency.

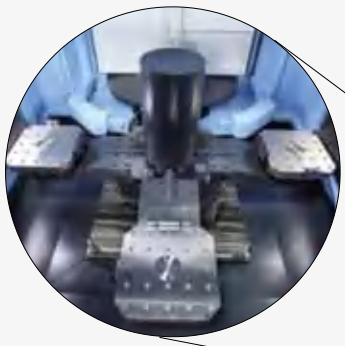

Major Features

- Compact Footprint
- 3 different setup stations maximize efficiency in setup
- Easy on-site installation

5 APC	HC 400 II / HC 500 II
No. of pallets	5
Length required for installation [L]	6274 mm (247 inch)
Width required for installation [W]	3046 mm (120 inch)

※ Please consult with Doosan for putting 500 mm pallet on 5 APC.

Doosan Multiple Pallet System [MPS] option

Doosan's MPS allows users to program and automate up to 7 pallets. This system is ideal for manufacturing variety of parts in small quantity.

7 MPS

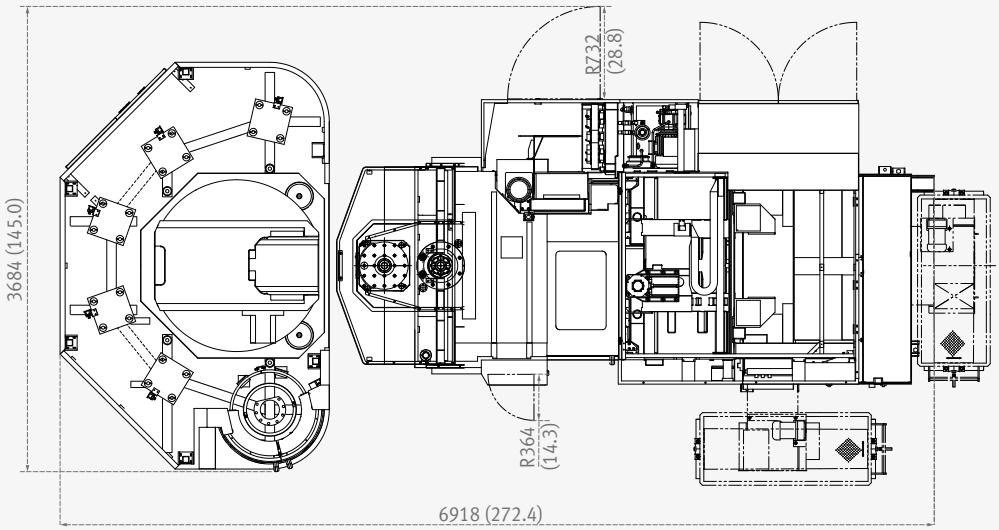

7-MPS	HC 400 II / HC 500 II
No. of pallets	7
Length required for installation [L]	6918 mm (272.3 inch)
Width required for installation [W]	3684 mm (145 inch)

※ Please consult with Doosan for putting 500 mm pallet on 7 MPS.

* Dimensions does not include chip conveyor and MPS foot board.

User Friendly

New operation panel interface allows users to more conveniently operate the machine.

Convenient Operation Panel

Doosan's new operation panel design is uniform throughout all new Doosan machines, and it includes number of custom keys which can be utilized by the users to further improve ease of operation.

Special optional buttons can be added to control fixture clamp/unclamp, counter, timer.

Each buttons are separated by partitions in order to prevent operation error.

Swivel Type Operation Panel

The operation panel swivels by 90°. Also, displaying various alarm messages regarding machine or control error further enhances convenient operation.

PCMCIA Card

Operators can easily upload and download programs, parameter, tool data, and ladder program by PCMCIA card and it also supports DNC operation.

Portable MPG

The portable MPG provides users the flexibility to easily see and setup the workpiece.

USB Port

Operators can easily upload and download programs, parameter, tool data, and ladder program by USB drive, however DNC operation on USB is not supported.

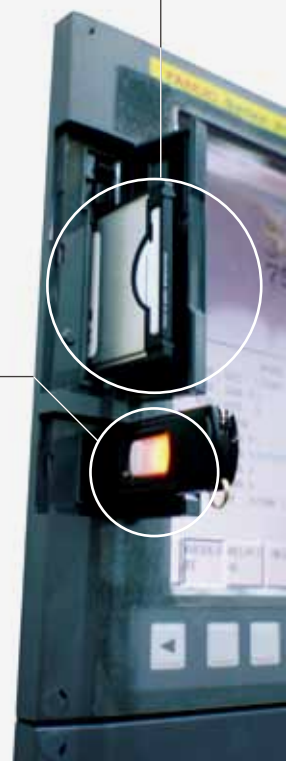

EOP Function

Doosan's Easy Operation Package (EOP) provides support functions such as tool, help, operation, and pallet magazines.

Easy Operation Package

Doosan's Easy Operation Package (EOP) allows operators to conveniently and efficiently control the machine with support functions such as tool, help, operation, and pallet magazine.

Tool Support Functions

Tool management I

- Manages tool magazine
- Displays tool status
- Fastems tool add / remove function option

Tool management II option

- Manages tool magazine
- Tool life management
- Estimates tool life
- Manages tool status
- Balluff Tool ID function

Tool load monitor option

- Detects tool damage
- Detects abnormalities during operation
- Detects air cutting

ATC / APC panel

- ATC manual
- APC manual

Operation Support Functions

Operation rate

- Records multiple machine operation rate
- Support 3 shift operation
- Counts and records 30 day operation rate
- Display data for specific period

PMC switch

- Selects function on the operation panel
- Alternates for toggle software
- NC option software

Help Text Function

Easy NC parameter

- Displays detail descriptions for major parameters
- Displays parameter settings

Calculator

- Calculator function
- 4 arithmetical operations
- Supports mathematical functions

M Code List

- Displays list of major M codes

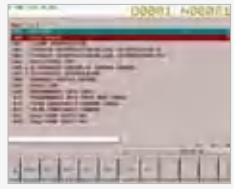

G Code List

- Displays list of major G codes

Pallet Magazine Support Functions

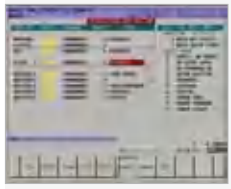

Multi-pallet station option

- Control MPS operation
- Displays information on MPS PMG
- Setup machining schedule
- Auto call function
- Manual operation and coordinate setting function

APC setting

- Displays control screen for 2 pallet APC

Spindle Power – Torque Diagram

8000 r/min

Spindle motor : 18.5 / 11 kW (24.8 / 14.7 Hp)

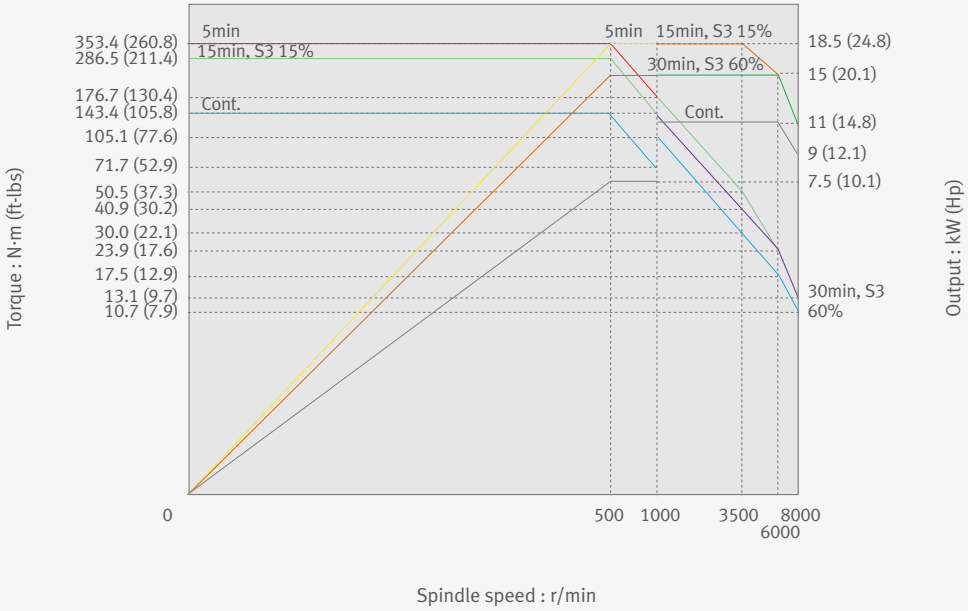

12000 r/min

Spindle motor : 18.5 / 11 kW (24.8 / 14.7 Hp)

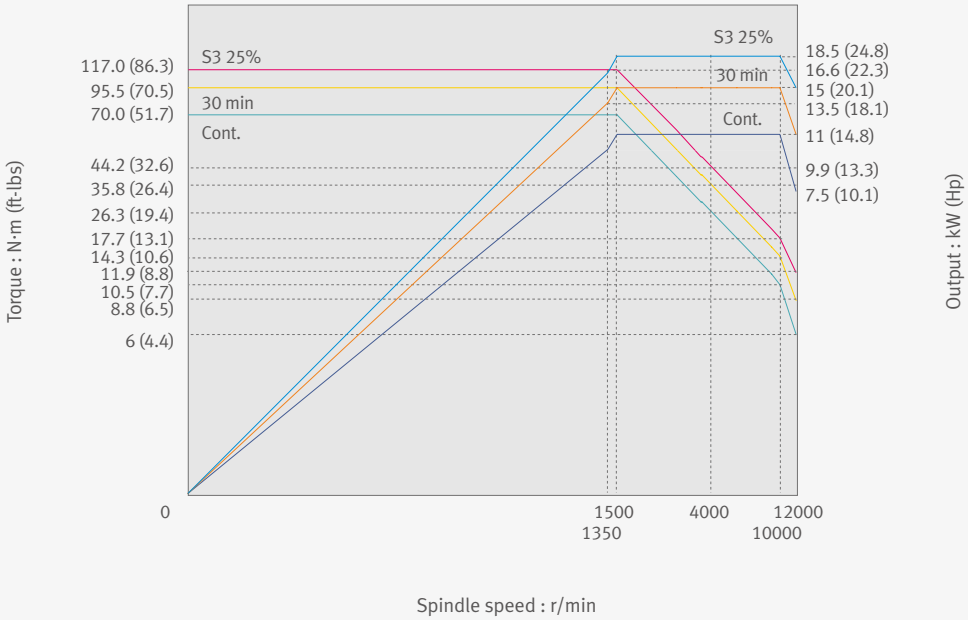

External Dimensions

HC Ⅱ series

Unit : mm (inch)

Top View

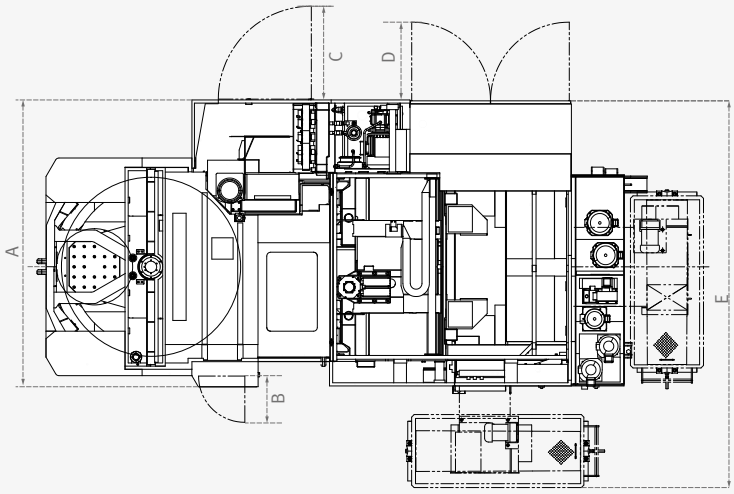

Front View

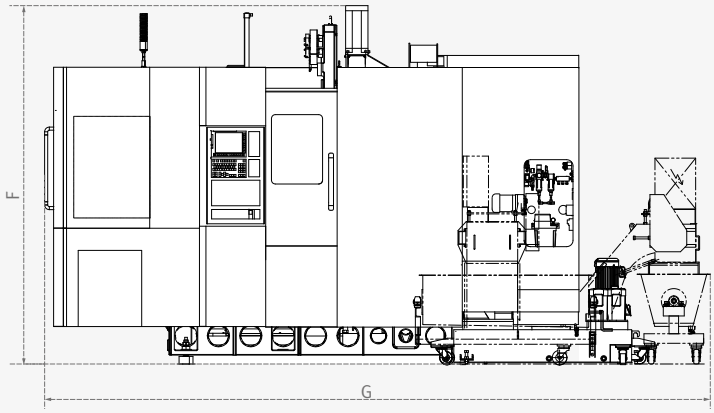

Model	A	B	C	D	E	F	G
HC 400 Ⅱ	2260 (89)	R 364 (14.3)	R 732 (28.8)	620 (24.4)	3666 (144.3)	2822 (111.1)	5240 (206.3)
HC 500 Ⅱ	2625 (103.3)	R 364 (14.3)	R 544 (21.4)	630 (24.8)	4093 (161.1)	2993 (117.8)	6073 (239.1)

Pallet Dimensions

HC 400 Ⅱ

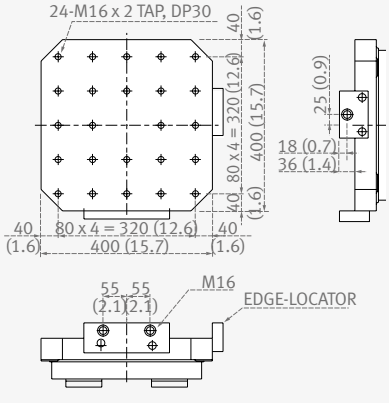

HC 500 Ⅱ

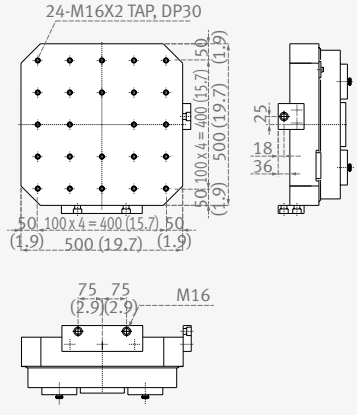

Machine Specifications

Description			Unit	HC 400 Ⅱ	HC 500 Ⅱ
Machining Capacity	Travel distance	X-axis	mm (inch)	600 (23.6)	850 (33.5)
		Y-axis	mm (inch)	560 (22)	700 (27.6)
		Z-axis	mm (inch)	565 (22.2)	750 (29.5)
	Distance from spindle nose to table center		mm (inch)	150 ~ 715 (5.9 ~ 28.1)	150 ~ 900 (5.9 ~ 35.4)
	Distance from spindle center to table top		mm (inch)	50 ~ 610 (1.9 ~ 24)	50 ~ 750 (1.9 ~ 29.5)
Feedrate	Rapid Feedrate	X-axis	m/min (ipm)	40 (1574.8)	
		Y-axis	m/min (ipm)	40 (1574.8)	
		Z-axis	m/min (ipm)	40 (1574.8)	
	Cutting feedrate		mm/min (ipm)	40000 (1574.8)	
Pallet	Pallet type			24-M16 X P2.0	
	Pallet indexing angle		deg	1 {0.001}*	
	Max. loading capacity		kg (lb)	400 (881.8)	500 (1102.3)
	Max. workpiece size		mm (inch)	600 x 800 (23.6 x 31.5)	800 x 900 (31.5 x 35.4)
	Pallet size		mm (inch)	400 x 400 (15.7 x 15.7)	500 x 500 (19.7 x 19.7)
Spindle	Max. spindle speed		r/min	8000 {12000}*	
	Data specification			ISO #40, 7/24 TAPER	
	Max. torque		N·m (ft-lbs)	1034 {1444} (368.8 {1065})*	1732 {1444} (1277.5 {1065})*
Automatic Pallet Changer (APC)	No. of pallets		ea	2	
	Pallet change time		s	8	8.5
	Indexing angle (rotation)		deg	90	
Automatic Tool Changer (ATC)	Tool shank type			BT40 {CAT40 / DIN 40 / HSK-A63}*	
	Tool storage capacity		ea	40 {60 / 80 / 120}*	
		Matrix Type	ea	{170 / 262}*	
	Max. tool diameter	W/O adjacent tool	mm (inch)	75 (2.9)	
		With adjacent tool	mm (inch)	140 (5.5)	
	Max. tool length		mm (inch)	300 (11.8)	400 (15.7)
	Max. tool weight		kg (lb)	10 (22)	
	Tool change time (T-T-T, tool weight less than 12K)		s	1.5	
	Tool change time (C-T-C, tool weight less than 12K)		s	4	
Motor	Spindle motor power		kW (Hp)	18.5 / 11 (24.8 / 14.7)	
Power Source	Power consumption		kVA	58	
	Compressed air pressure		Mpa (psi)	0.54 (78.3)	
Tank Capacity	Coolant tank capacity		L (galon)	550 (145.3)	640 (169.1)
	Lube tank capacity		L (galon)	1.4 (0.37)	
Machine Dimensions	Height		mm (inch)	2830 (111.4)	3000 (118.1)
	Length		mm (inch)	4630 (182.3)	5320 (209.4)
	Width		mm (inch)	2260 (88.9)	2680 (105.5)
	Weight		kg (lb)	11000 (24250.8)	12500 (27557.8)

* { } : Option

NC Unit Specifications

FANUC

● Standard ○ Optional X Not applicable

Item		Spec.	DOOSAN FANUC i	FANUC 32i
AXES CONTROL	Controlled axes	4 (X, Y, Z, B)	X, Y, Z, B	X, Y, Z, B
	Additional controlled axes	ADD 1 AXIS (5TH AXIS)	○	○
	Simultaneously controlled axes	Positioning (G00) / Linear interpolation (G01) : 3 axes Circular interpolation (G02, G03) : 2 axes	●	●
	Least command increment	0.001 mm / 0.0001"	●	●
	Least input increment	0.001 mm / 0.0001"	●	●
	Increment system C	IS-C	○	○
	Interpolation type pitch error compensation		-	○
	Position switch		●	○
	Inverse time feed		●	○
	Cylindrical interpolation	G07.1	●	○
	NURBS interpolation		-	-
	Bell-type acceleration/deceleration before look ahead interpolation	Included in AI contour control I or II (0i-MF, 31 / 32i)	○	●
	Rigid tapping bell-shaped acceleration/ deceleration	Rigid tapping is required.	-	○
	Exponential interpolation		-	-
	Involute interpolation		-	-
	Smooth backlash compensation		○	●
	Automatic corner override	G62	●	○
	Automatic corner deceleration	Included in AI contour control I or II (0i-MF, 31 / 32i)	●	●
	Cutting feedrate clamp		●	●
	Rapid traverse bell-shaped acceleration/ deceleration		●	●
	Handle interruption		●	○
	Manual handle retrace		○	○
	Manual handle feed 2/3 unit		●	○
	Nano smoothing		○	○
	AICC II	200BLOCK	●	●
	AICC II	400 BLOCK	-	○
	High-speed processing	600 BLOCK	-	-
	Look-ahead blocks expansion	1000 BLOCK	-	-
	Linear ACC/DEC before cutting feed interpolation		-	●
SPINDLE & M-CODE FUNCTION	M-code function	M 3 digits	●	●
	Spindle orientation		●	●
	Retraction for rigid tapping		●	●
	Rigid tapping	G84, G74	●	●
TOOL FUNCTION	Number of tool offsets	200-pairs	-	●
	Number of tool offsets	400-pairs	●	○
	Number of tool offsets	499 / 999 / 2000 -pairs	-	-
	Tool nose radius compensation	G40, G41, G42	●	●
	Tool length compensation	G43, G44, G49	●	●
	Tool life management		●	●
	Addition of tool pairs for tool life manage-ment		●	○
	Tool number command	T3 digits	●	●
	Tool offset memory C	Geometry / Wear and Length / Radius offset memory	●	●
	Tool length measurement		●	●
	Tool length offset		●	●
	Tool offset	G45 - G48	●	○
	Rotary table dynamic fixture offset		-	○
	Work setting error compensation		-	○
PROGRAM-MING & EDITING FUNCTION	Absolute / Incremental programming	G90 / G91	●	●
	Automatic Coordinate system setting		●	●
	Background editing		●	●
	Canned cycle	G73, G74, G76, G80 - G89, G99	●	●
	Circular interpolation by radius programming		●	●
	Custom macro		●	●
	Addition of custom macro common variables	#100 - #199, #500 - #999	●	●
	Macro executor		●	●
	Custom software	2MB	●	-

NC Unit Specifications

FANUC

● Standard ○ Optional X Not applicable

Item		Spec.	DOOSAN FANUC i	FANUC 32i
PROGRAM-MING & EDITING FUNCTION	Custom software	4MB, 6MB	○	-
	Custom software	8MB	○	●
	Custom software	12MB, 16MB	○	○
	Decimal point input		●	●
	Extended P-code variables 256Kbyte		-	-
	Extended P-code variables 512Kbyte		●	●
	Extended P-code variables 1Mbyte		-	-
	Extended part program editing		●	●
	Part program storage	256KB(640m)	-	●
	Part program storage	512KB(1,280m)	●	○
	Part program storage	1MB(2,560m)	-	○
	Part program storage	2MB(5,120m)	○	○
	Part program storage	4MB(1,0240m)	-	-
	Part program storage	8MB(2,0480m)	-	-
	Inch/metric conversion	G20 / G21	●	●
	Label skip		●	●
	Maximum commandable value	±99999.999mm(±9999.9999 inch)	●	●
	Number of Registered programs	400 ea	●	-
	Number of Registered programs	500 ea	-	●
	Optional block skip	1 BLOCK	-	●
	Optional block skip	9 BLOCK	●	○
	Optional stop	M01	●	●
	Program file name	32 characters	●	●
	Program number	O4-digits	●	-
	Sequence number	N 8-digit	N5 digit	N8 digit
	Playback function		●	○
	Workpiece coordinate system	G52 - G59	●	●
	Addition of workpiece coordinate system	G54.1 P1 - 48 (48 pairs)	●	●
	Addition of workpiece coordinate system	G54.1 P1 - 300 (300 pairs)	-	○
	Tilted working plane indexing command	G68.2	○	○
OTHERS FUNCTIONS (Operation, setting & Display, etc)	Embeded Ethernet		●	●
	MDI / DISPLAY unit	8.4" Color LCD, keyboard for data input(small), soft-keys	-	-
	MDI / DISPLAY unit	10.4" Color LCD, Keyboard for data input, soft-keys	●	●
	MDI / DISPLAY unit	15" Color LCD, Keyboard for data input, soft-keys	-	-
	I/O interface	RS - 232C	●	●
	USB memory interface	Only Data Read & Write	●	●
	Stored stroke check 2		●	○
	Multi language display		●	●
	3rd / 4th reference return		●	○
	Cs contouring control		●	○
	Reader/Puncher interface (for 2ch)		●	●
	Multi spindle control		-	-
	Retraction for 3-dimensional rigid tapping		○	○
	Extended Spindle orientation (Spindle Multi Orientation)		●	●
	Chopping function	G81.1	-	○
	High speed skip function		●	○
	Polar coordinate command	G15 / G16	●	○
	Polar coordinate interpolation	G12.1 / G13.1	-	○
	Programmable mirror image	G50.1 / G51.1	●	○
	Scaling	G50, G51	●	○
	Single direction positioning	G60	●	○
	Pattern data input		●	○
	Jerk control	AI contour control II is required.	○	○
	Fast Data server with1GB PCMCIA card		○	○
	Fast Ethernet		○	○
	3-dimensional coordinate conversion		○	○
	3-dimensional tool compensation		-	○
	3-dimensional manual feed		○	○
	Tape format for FS15		-	-
	Tape format for FS10/11		●	○
	Figure copying	G72.1, G72.2	-	○
	Machining time stamp function		-	○
	Machining quality level adjustment		○	○
	EZ Guide I with 10.4" Color TFT	- Doosan infracore Conversational Programming Solution - When the EZ Guide i is used, the Dynamic graphic display cannot application	○	○
	Dynamic graphic display (with 10.4" Color TFT LCD)	- Machining profile drawing. - When the EZ Guide i is used, the Dynamic graphic display cannot application	○	○

Responding to Customers Anytime, Anywhere

Global Service Support Network

Corporations	Dealer Networks	Technical Centers	Factories
5	122	18	3

Technical Center: Sales Support, Service Support, Parts Support

Doosan Machine Tools' Global Network, Responding to Customer's Needs nearby, Anytime, Anywhere

Doosan machine tools provides a system-based professional support service before and after the machine tool sale by responding quickly and efficiently to customers' demands. By supplying spare parts, product training, field service and technical support, we can provide top class support to our customers around the world.

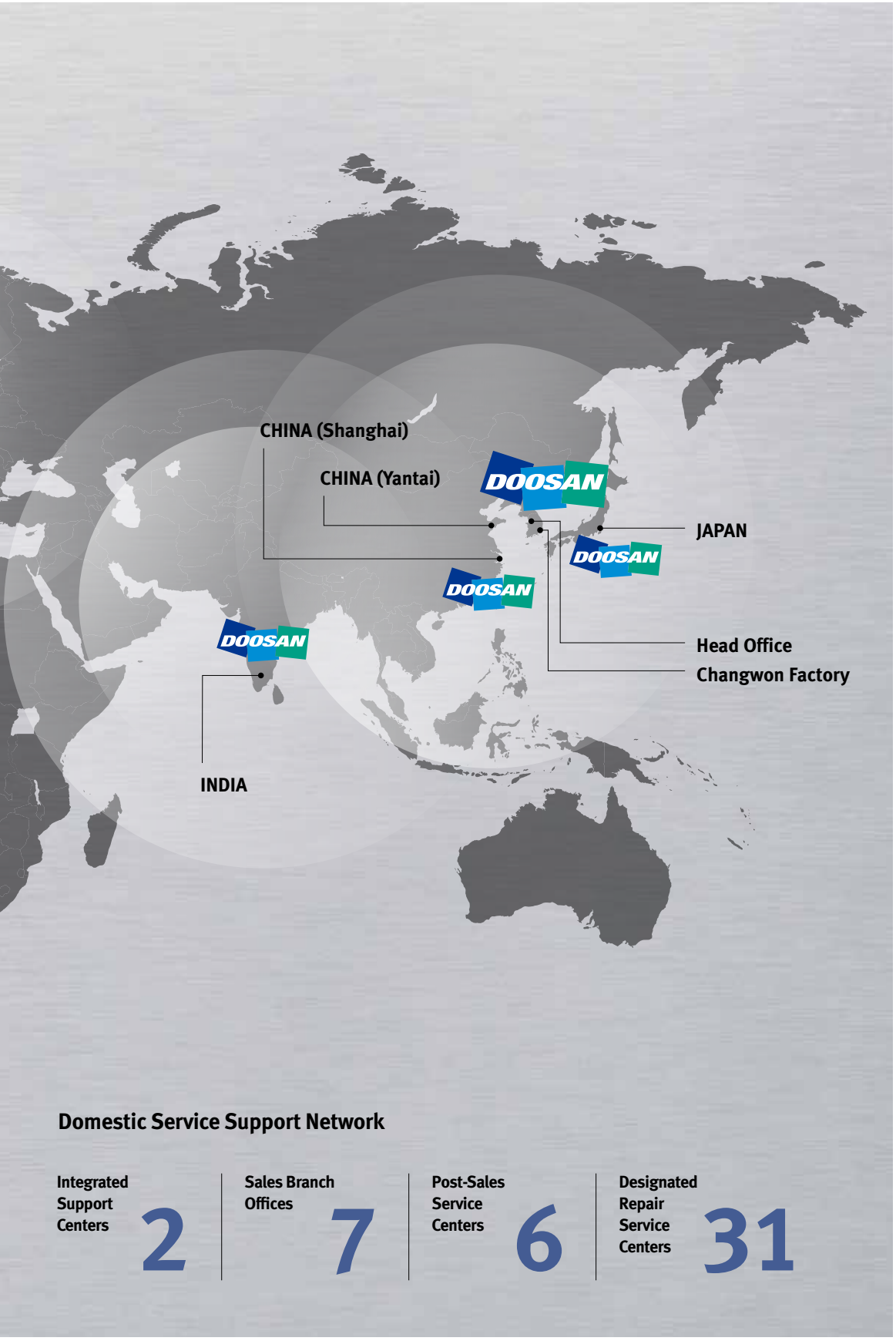

Domestic Service Support Network

Integrated Support Centers	Sales Branch Offices	Post-Sales Service Centers	Designated Repair Service Centers
2	7	6	31

Customer Support Service

We help customers to achieve success by providing a variety of professional services from pre-sales consultancy to post-sales support.

Supplying Parts

- Supplying a wide range of original Doosan spare parts
- Parts repair service

Field Services

- On site service
- Machine installation and testing
- Scheduled preventive maintenance
- Machine repair

Technical Support

- Supports machining methods and technology
- Responds to technical queries
- Provides technical consultancy

Training

- Programming / machine setup and operation
- Electrical and mechanical maintenance
- Applications engineering

Major Specifications

HC Ⅱ series

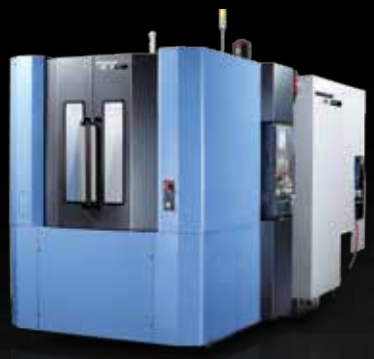

Specification	Unit	HC 400 Ⅱ	HC 500 Ⅱ
Pallet size	mm (inch)	400 x 400 (15.7 x 15.7)	500 x 500 (19.7 x 19.7)
Taper specification	taper	40	40
Max. spindle speed	r/min	8000	8000
Spindle power	kW (Hp)	18.5 (24.8)	18.5 (24.8)
Travel distance (X-axis / Y-axis / Z-axis)	mm (inch)	600 / 560 / 565 (23.6 / 22 / 22.2)	850 / 700 / 750 (33.4 / 27.5 / 29.5)
Tools	ea	40	40
NC system	-	FANUC	FANUC

Doosan Machine Tools

http://www.doosanmachinetools.com
www.facebook.com/doosanmachinetools

Optimal Solutions for the Future

Head Office
Yeonkang Bldg., 6th FL., 270, Yeonji-dong,
Jongno-gu, Seoul, Korea
Tel +82-2-3670-5345 / 5362
Fax +82-2-3670-5382

Doosan Machine Tools China
Room 101,201,301, Building 39 Xinzhuan Highway
No.258 Songjiang District,China Shanghai(201612)
Tel +86 21-5445-1155
Fax +86 21-6405-1472

Doosan Machine Tools Japan
#2412, Mita Kokusai Bldg. 1-4-28 Mita,
Minato-ku, Tokyo 108-0073, Japan
Tel +81 3 5730 9013
Fax +81 3 5730 9016

Doosan Machine Tools America
19A Chapin Rd., Pine Brook, NJ 07058, U.S.A.
Tel +1-973-618-2500
Fax +1-973-618-2501

Doosan Machine Tools Europe
Emdener Strasse 24, D-41540 Dormagen, Germany
Tel +49-2133-5067-100
Fax +49-2133-5067-111

Doosan Machine Tools India
106 / 10-11-12, Amruthahalli, Byatarayanapura,
Bellary road, Bangalore-560 092, India
Tel +91-80-4266-0122 / 121 / 100

* For more details, please contact Doosan Machine Tools.
* The specifications and information above-mentioned may be changed without prior notice.
* Doosan Machine Tools Co., Ltd. is a subsidiary of MBK Partners. The trademark DOOSAN is used under a licensing agreement with Doosan Corporation, the registered trademark holder.